SIEMENS
SINAMICS

SINAMICS V20 Inverter

Compact Operating Instructions

Table of contents

A5E37281078-003, 05/2016

1 Fundamental safety instructions

1.1 General safety instructions

WARNING

Danger to life if the safety instructions and residual risks are not observed

If the safety instructions and residual risks in the associated hardware documentation are not observed, accidents involving severe injuries or death can occur.

- Observe the safety instructions given in the hardware documentation.
- Consider the residual risks for the risk evaluation.

WARNING

Danger to life or malfunctions of the machine as a result of incorrect or changed parameterization

As a result of incorrect or changed parameterization, machines can malfunction, which in turn can lead to injuries or death.

- Protect the parameterization (parameter assignments) against unauthorized access.
- Respond to possible malfunctions by applying suitable measures (e.g. EMERGENCY STOP or EMERGENCY OFF).

1.2 Industrial security

Note

Industrial security

Siemens provides products and solutions with industrial security functions that support the secure operation of plants, solutions, machines, equipment and/or networks. They are important components in a holistic industrial security concept. With this in mind, Siemens' products and solutions undergo continuous development. Siemens recommends strongly that you regularly check for product updates.

For the secure operation of Siemens products and solutions, it is necessary to take suitable preventive action (e.g. cell protection concept) and integrate each component into a holistic, state-of-the-art industrial security concept. Third-party products that may be in use should also be considered. For more information about industrial security, visit this address (http://www.siemens.com/industrialsecurity).

To stay informed about product updates as they occur, sign up for a product-specific newsletter. For more information, visit this address (http://support.automation.siemens.com).

WARNING

Danger as a result of unsafe operating states resulting from software manipulation

Software manipulation (e.g. by viruses, Trojan horses, malware, worms) can cause unsafe operating states to develop in your installation which can result in death, severe injuries and/or material damage.

- Keep the software up to date.

  You will find relevant information and newsletters at this address (http://support.automation.siemens.com).
- Incorporate the automation and drive components into a holistic, state-of-the-art industrial security concept for the installation or machine.

  You will find further information at this address (http://www.siemens.com/industrialsecurity).
- Make sure that you include all installed products into the holistic industrial security concept.

WARNING

Danger to life due to software manipulation when using exchangeable storage media

Storing files onto exchangeable storage media amounts to an increased risk of infection, e.g. with viruses and malware. As a result of incorrect parameterization, machines can malfunction, which in turn can lead to injuries or death.

- Protect files stored on exchangeable storage media from malicious software by taking suitable protection measures, e.g. virus scanners.

2 Installation

2.1 Mechanical installation

Protection against the spread of fire

The device may be operated only in closed housings or in control cabinets with protective covers that are closed, and when all of the protective devices are used. The installation of the device in a metal control cabinet or the protection with another equivalent measure must prevent the spread of fire and emissions outside the control cabinet.

Protection against condensation or electrically conductive contamination

Protect the device, e.g. by installing it in a control cabinet with degree of protection IP54 according to IEC 60529 or NEMA 12. Further measures may be necessary for particularly critical operating conditions.

If condensation or conductive pollution can be excluded at the installation site, a lower degree of control cabinet protection may be permitted.

Mounting orientation and clearance

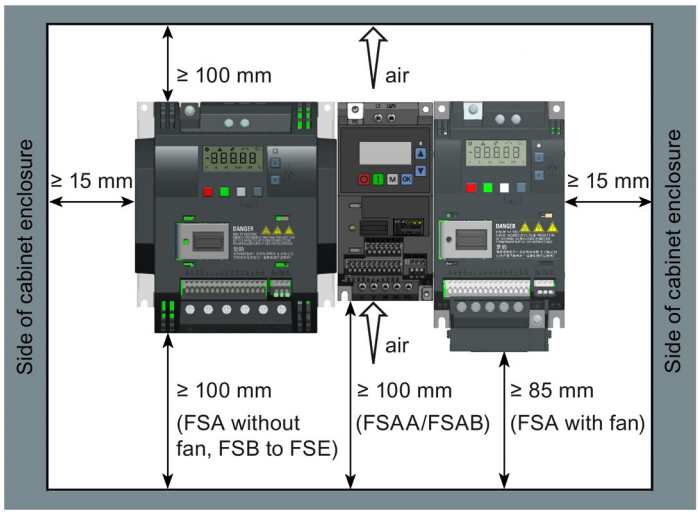

The inverter must be mounted vertically to a flat and non-combustible surface in an enclosed electrical operating area or a control cabinet.

Note

Install the inverter on a metal mounting plate in a control cabinet. The mounting plate has to be unpainted and with a good electrical conductivity.

Outline dimensions

(Unit: mm/inch)		W	H	H1 [1]	D	D1 [2]
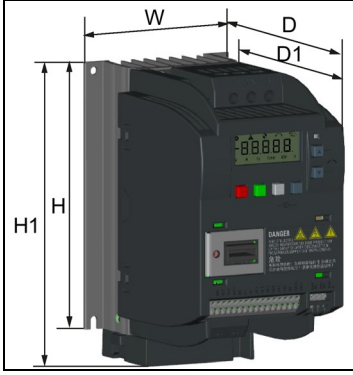	FSAA	68/2.7	142/5.6	-	107.8/4.2	-
	FSAB	68/2.7	142/5.6	-	127.8/5	-
	FSA	90/3.5	150/5.9	166/6.5	145.5 (114.5 [3])/5.7(4.5 [3])	-
	FSB	140/5.5	160/6.3	-	164.5/6.5	106/4.17
	FSC	184/7.24	182/7.17	-	169/6.7	108/4.25
	FSD	240/9.4	206.5/8.1	-	172.5/6.8	98/3.9
	FSE	245/9.6	216/8.5	264.5/10.4	209/8.2	118.5/4.7

1) Height of frame sizes with fan(s)

2) Depth inside the cabinet for push-through mounting

3) Depth of Flat Plate inverter (400 V 0.75 kW variant only)

Drill patterns

(Unit: mm)		W	H	W1	H1	H2	Ø	Screw	Tightening torque
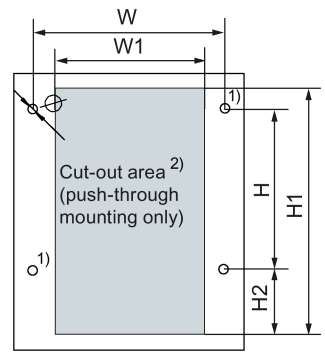	FSAA/FSAB	58	132	-	-	-	4.6	2 × M4	1.8 Nm ± 10%
	FSA	79	140	-	-	-	4.6	4 × M4	1.8 Nm ± 10%
	FSB	127	135	-	-	-	4.6	4 × M4	1.8 Nm ± 10%
	FSB 2)	125	108	118	172	45.5	4.6	4 × M4	1.8 Nm ± 10%
	FSC	170	140	-	-	-	5.8	4 × M5	2.5 Nm ± 10%
	FSC 2)	170	116	161	197	61	5.8	4 × M5	2.5 Nm ± 10%
	FSD	223	166	-	-	-	5.8	4 × M5	2.5 Nm ± 10%
	FSD 2)	223	142	214	222	59	5.8	4 × M5	2.5 Nm ± 10%
	FSE	228	206	-	-	-	5.8	4 × M5	2.5 Nm ± 10%
	FSE 2)	228	182	219	282	83	5.8	4 × M5	2.5 Nm ± 10%

1) For FSAA/FSAB, you only need to drill these two holes for cabinet mounting.

2) For push-through mounting only.

For more information about the push-through mounting and the installation of the Flat Plate inverter, see the SINAMICS V20 Inverter Operating Instructions.

2.2 Electrical installation

WARNING

Requirements for United States/Canadian installations (UL/cUL)

For configurations in conformance with UL/cUL, use the UL/cUL approved fuses, circuit breakers and Type E combination motor controllers (CMC) which are specified in this manual. Refer to the following tables for specific types of branch circuit protection for each inverter and corresponding Short-Circuit Current Rating (SCCR). For each frame size, use 75 °C copper wire only.

This equipment is capable of providing internal motor overload protection according to UL508C/UL61800-5-1. In order to comply with UL508C/UL61800-5-1, parameter P0610 must not be changed from its factory setting of 6.

For Canadian (cUL) installations the inverter mains supply must be fitted with any external recommended suppressor with the following features:

- Surge-protective devices; device shall be a Listed Surge-protective device (Category code VZCA and VZCA7)
- Rated nominal voltage 480/277 VAC (for 400 V variants) or 240 VAC (for 230 V variants), 50/60 Hz, three phase (for 400 V variants) or single phase (for 230V variants)
- Clamping voltage VPR = 2000 V (for 400 V variants) / 1000 V (for 230 V variants), IN = 3 kA min, MCOV = 508 VAC (for 400 V variants) / 264 VAC (for 230V variants), SCCR = 40 kA
- Suitable for Type 1 or Type 2 SPD application
- Clamping shall be provided between phases and also between phase and ground

NOTICE

Inverter damage due to improper mains disconnection

Improper mains disconnection can cause inverter damage.

Do not perform mains diconnection on the motor-side of the system if the inverter is in operation and the output current is not zero.

WARNING

Danger to life due to fire or electric shock after the opening of the branch-circuit protective device

The opening of the branch-circuit protective device may be an indication that a fault current has been interrupted. In this case, fire or electric shock can result.

To reduce the risk of fire or electric shock, current-carrying parts and other components of the controller should be examined and the controller should be replaced if damaged. If burnout of the current element of an overload relay occurs, the complete overload relay must be replaced.

Wiring diagram

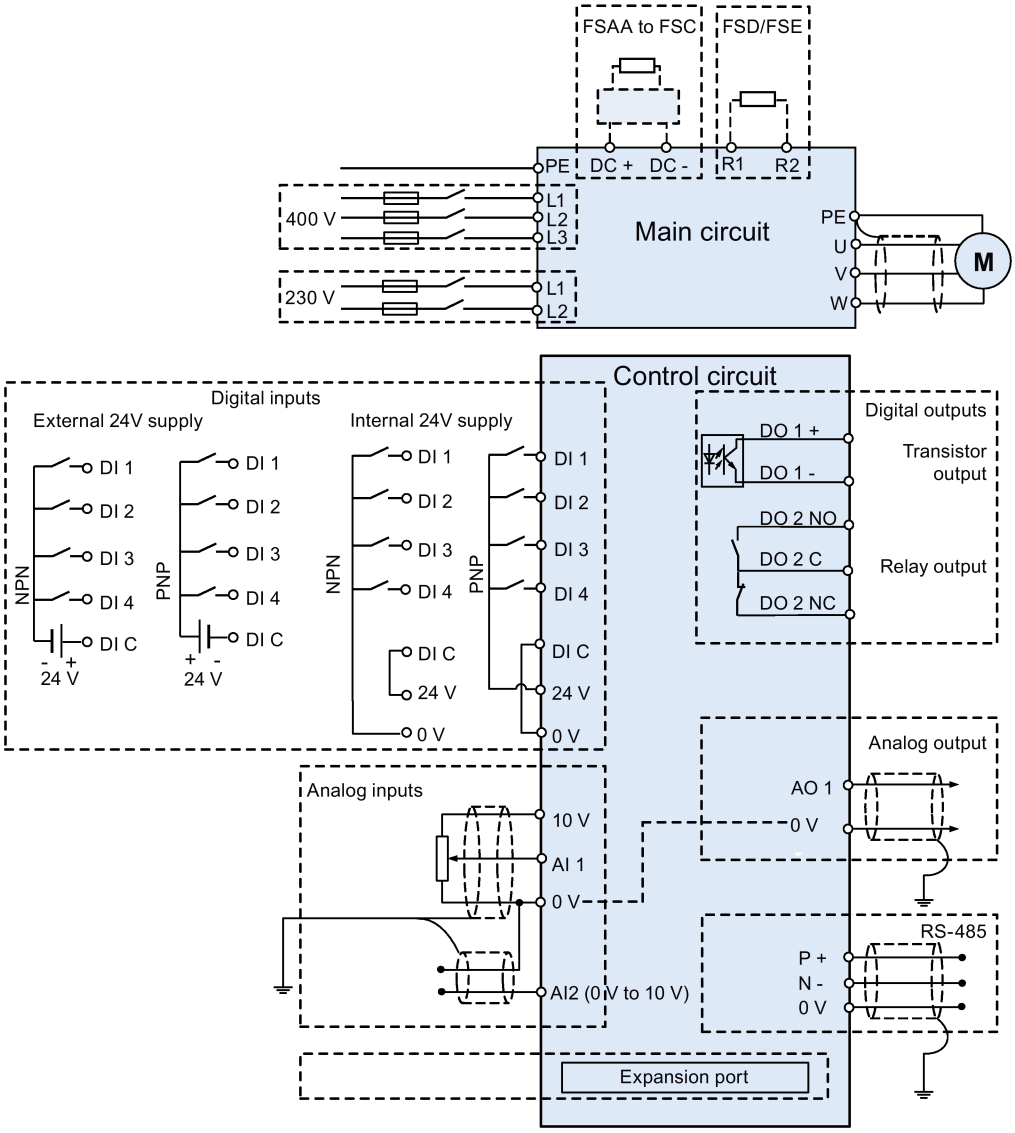

Note

The resistance of the potentiometer for each analog input must be ≥ 4.7 kΩ.

Branch circuit protection according to IEC standards

Branch circuit protection with semiconductor fuses (IEC)

Frame size		Inverter power rating (kW)	IEC-compliant fuse (Siemens)	Frame size		Inverter power rating (kW)	IEC-compliant fuse (Siemens)
400 V	A	0.37 to 1.1	3NA3801 (6 A)	230 V	AA/AB/A	0.12 to 0.55	3NA3803 (10 A)
		1.5	3NA3803 (10 A)				
		2.2	3NA3805 (16 A)			0.75	3NA3805 (16 A)
	B	3.0	3NA3805 (16 A)		B	1.1	3NA3807 (20 A)
		4.0	3NA3807 (20 A)			1.5	3NA3812 (32 A)
	C	5.5	3NA3812 (32 A)		C	2.2	3NA3814 (35 A)
	D	7.5 to 15	3NA3822 (63 A)				
	E	18.5	3NA3022 (63 A)				
		22	3NA3024 (80 A)			3.0	3NA3820 (50 A)

Branch circuit protection with circuit breakers and Type E combination motor controllers

For detailed information about the permissible types, see the following tables in accordance with UL/cUL standards.

Branch circuit protection according to UL/cUL standards

You may operate the SINAMICS V20 on a branch circuit with the specified short-circuit current rating (SCCR) provided the specified branch-circuit protection device is installed as detailed in the following tables.

Branch circuit protection with non-semiconductor fuses of Class J, T, CC, G or CF (JDDZ1/JDDZ7)

Frame size		Inverter power rating (kW)	Maximum rated current of fuse (A)	SCCR	Minimum enclosure volume (m^3/cu. in.) [1]
400 V	A	0.37 to 2.2	15	100 kA, 480 VAC	0.007/427
	B	3.0 to 4.0	20		0.012/732
	C	5.5	30		0.019/1159
	D	7.5 to 15	60		0.230/14035
	E	18.5	80		0.370/22578
		22	100		
230 V	AA to AB	0.12 to 0.75	15	100 kA, 240 VAC	-
	A	0.12 to 0.75	15		-
	B	1.1 to 1.5	30		
	C	2.2 to 3.0	50		

[1] Unventilated enclosure of minimum volume as specified in the table above is required except for 230 V FSAA/FSAB and inverters protected by Class J or Class CC fuses. There is no minimum enclosure volume requirement for 230 V FSAA/FSAB.

Branch circuit protection with circuit breakers (DIVQ1/DIVQ7)

Frame size		Inverter power rating (kW)	Maximum rated current of circuit breaker (A)	Circuit breaker type [1]	SCCR of SINAMICS V20 with circuit breaker	Minimum enclosure volume (m^3/cu. in.) [2]
400 V	A	0.37 to 2.2	15	3RV1742, LGG, CED6	65 kA, 480 VAC	0.47/28681
				3RV2711	65 kA, 480Y/277 VAC	
	B	3.0	15	3RV1742, LGG, CED6	65 kA, 480 VAC	0.8/48819
				3RV2711	65 kA, 480Y/277 VAC	
		4.0	20	3RV1742, LGG, CED6, HCGA	65 kA, 480 VAC	
				3RV2711	65 kA, 480Y/277 VAC	
				3RV2721	50 kA, 480Y/277 VAC	
				NCGA	35kA, 480V AC	
	C	5.5	30	3RV1742, LGG, CED6, HCGA	65 kA, 480 VAC	1.22/74449
				3RV2711	65 kA, 480Y/277 VAC	
				3RV2721	50 kA, 480Y/277 VAC	
				NCGA	35 kA, 480 VAC	
	D	7.5	30	3RV1742, LGG, CED6, HCGA	65 kA, 480 VAC	1.85/112894
				3RV2711	65 kA, 480Y/277 VAC	
				3RV2721	50 kA, 480Y/277 VAC	
				NCGA	35 kA, 480 VAC	
		11	50	LGG, CED6, HCGA, HDGA, HDGB, LDGA, LDGB	65 kA, 480 VAC	
				3RV1742	65 kA, 480Y / 277 VAC [3]	
				NCGA, NDGA, NDGB	35 kA, 480 VAC	
		15	60	LGG, CED6, HCGA, HDGA, HDGB, LDGA, LDGB	65 kA, 480 VAC	
				3RV1742	65 kA, 480Y / 277 VAC [3]	
				NCGA, NDGA, NDGB	35 kA, 480 VAC	
	E	18.5 (HO)	70	3RV1742	65 kA, 480 V / 277 VAC [3]	2.93/178799
			80	LGG, CED6, HCGA, HDGA, HDGB, LDGA, LDGB, HFD6, HFXD6, HHFD6, HHFXD6, CFD6	65 kA, 480 VAC	
				NCGA, NDGA, NDGB, FXD6-A, FD6-A	35 kA, 480 VAC	
		22 (HO)	70	3RV1742	65 kA, 480V / 277 VAC [3]	
			100	LGG, CED6, HCGA, HDGA, HDGB, LDGA, LDGB, HFD6, HFXD6, HHFD6, HHFXD6, CFD6	65 kA, 480 VAC	
				NCGA, NDGA, NDGB, FXD6-A, FD6-A	35 kA, 480 VAC	

Frame size		Inverter power rating (kW)	Maximum rated current of circuit breaker (A)	Circuit breaker type [1]	SCCR of SINAMICS V20 with circuit breaker	Minimum enclosure volume (m^3/cu. in.) [2]
230 V	AA to AB	0.12 to 0.75	15	3RV1742, 3RV2711, LGG, LGGA, CED6	65 kA, 240 VAC	-
	A	0.12 to 0.75	15	3RV1742, 3RV2711, LGG, LGGA, CED6	65 kA, 240 VAC	0.47/28681
	B	1.1	30	3RV1742, 3RV2711, LGG, CED6, NCGA, HCGA	65 kA, 240 VAC	0.80/48819
				3RV2721	50 kA, 240 VAC	
		1.5	30	3RV1742, 3RV2711, LGG, CED6, NCGA, HCGA	65 kA, 240 VAC	
				3RV2721	50 kA, 240 VAC	
	C	2.2	40	3RV1742, LGG, CED6, NCGA, HCGA	65 kA, 240 VAC	1.22/74449
		3.0	50	3RV1742, LGG, CED6, NCGA, HCGA, NDGA, HDGA, LDGA, NDGB, HDGB, LDGB	65 kA, 240 VAC	

[1] NCGA and HCGA are UL Listed 3VL11 series (Siemens type VL150x UL) circuit breakers; NDGA, NDGB, HDGA and HDGB are UL listed 3VL25 series (Siemens type VL150 UL) circuit breakers shown in the European circuit breaker catalog LV 16.

[2] Unventilated enclosure of minimum volume as specified in the table above is required except for 230 V FSAA/FSAB. There is no minimum enclosure volume requirement for 230 V FSAA/FSAB.

[3] The rated current of Type "3RV1742" circuit breakers with SCCR 65 kA, 480 VAC must be < 35 A.

Branch circuit protection with Type E combination motor controllers (NKJH1/NKJH7) [1]

Frame size		Inverter power rating (kW)	CMC model number [2]	Maximum rated current (A)	Maximum rated power at 3-ph 460 V/1-ph 230 V (hp)	SCCR of SINAMICS V20 with CMC	Minimum enclosure volume (m^3/cu. in.) [3]
400 V	A	0.37	3RV20.1-1CA**	2.5	1	65 kA, 480Y/277 VAC	0.007/427
		0.55	3RV20.1-1DA**	3.2	1.5		
		0.75	3RV20.1-1EA**	4.0	2		
		1.1	3RV20.1-1GA**	6.3	3		
		1.5	3RV20.1-1HA**	8.0	5		
		2.2	3RV20.1-1JA**	10.0	5		
	B	3.0	3RV20.1-1KA**	12.5	7.5	65 kA, 480Y/277 VAC	0.012/732
		4.0	3RV20.1-4AA**	16	10		
			3RV.03.-4AA##	16	10		
	C	5.5	3RV20.1-4AA**	16	10	65 kA, 480Y/277 VAC	0.019/1159
			3RV2021-4BA**	20	10		
			3RV.03.-4BA##	20	15		
	D	7.5	3RV20.1-4AA**	16	10	65 kA, 480Y/277 VAC	0.23/14035
			3RV2021-4DA**	25	15		
			3RV.03.-4DA##	25	20		
		11	3RV.03.-4HA##	50	40	65 kA, 480Y/277 VAC	
			3RV104.-4HA##	50	40		
			3RV2021-4EA**	32	20	50 kA, 480Y/277 VAC	
		15	3RV.03.-4HA##	50	40	65 kA, 480Y/277 VAC	
			3RV104.-4JA##	63	50		
	E	18.5 (HO)	3RV104.-4KA##	75	60	65 kA, 480Y/277 VAC	0.37/22578
		22 (HO)	3RV104.-4LA##	90	75		
230 V	AA/ AB/ A	0.12	3RV20.1-1DA**	3.2	0.25	65 kA, 240 VAC	-
		0.25	3RV20.1-1FA**	5.0	0.5		
		0.37	3RV20.1-1HA**	8.0	1		
		0.55	3RV20.1-1JA**	10.0	1.5		
		0.75	3RV20.1-1KA**	12.5	2		
	B	1.1	3RV20.1-4AA**	16	2	65 kA, 240 VAC	-
			3RV2021-4BA**	20	3		
			3RV.03.-4BA##	20	3		
		1.5	3RV20.1-4AA**	16	2		
			3RV2021-4CA**	22	3		
			3RV.03.-4BA##	20	3		
	C	2.2	3RV20.1-4AA**	16	2	65 kA, 240 VAC	-
			3RV2021-4EA**	32	5	50 kA, 240 VAC	
			3RV.03.-4EA##	32	5	65 kA, 240 VAC	
		3.0	3RV2021-4EA**	32	5	50 kA, 240 VAC	
			3RV.03.-4FA##	40	7.5	65 kA, 240 VAC	
			3RV104.-4FA##	40	7.5		

[1] UL/cUL listed (NKJH/NKJH7) Siemens CMCs of the same type with a current rating lower than that is specified in the table above corresponding to the inverter power rating, and with a voltage rating as well as an interrupting current rating at least equal to those of the supply circuit may be used.

[2] "." can be 1 or 2; "**" can be 10, 15, 20, 25 or 40; "##" represents the last two digits available in order numbers.

[3] Unventilated enclosure of minimum volume as specified in the table above is required except for 230 V FSAA to FSC protected by Type E CMCs. There is no minimum enclosure volume requirement for inverters of 230 V FSAA to FSC.

Terminal description

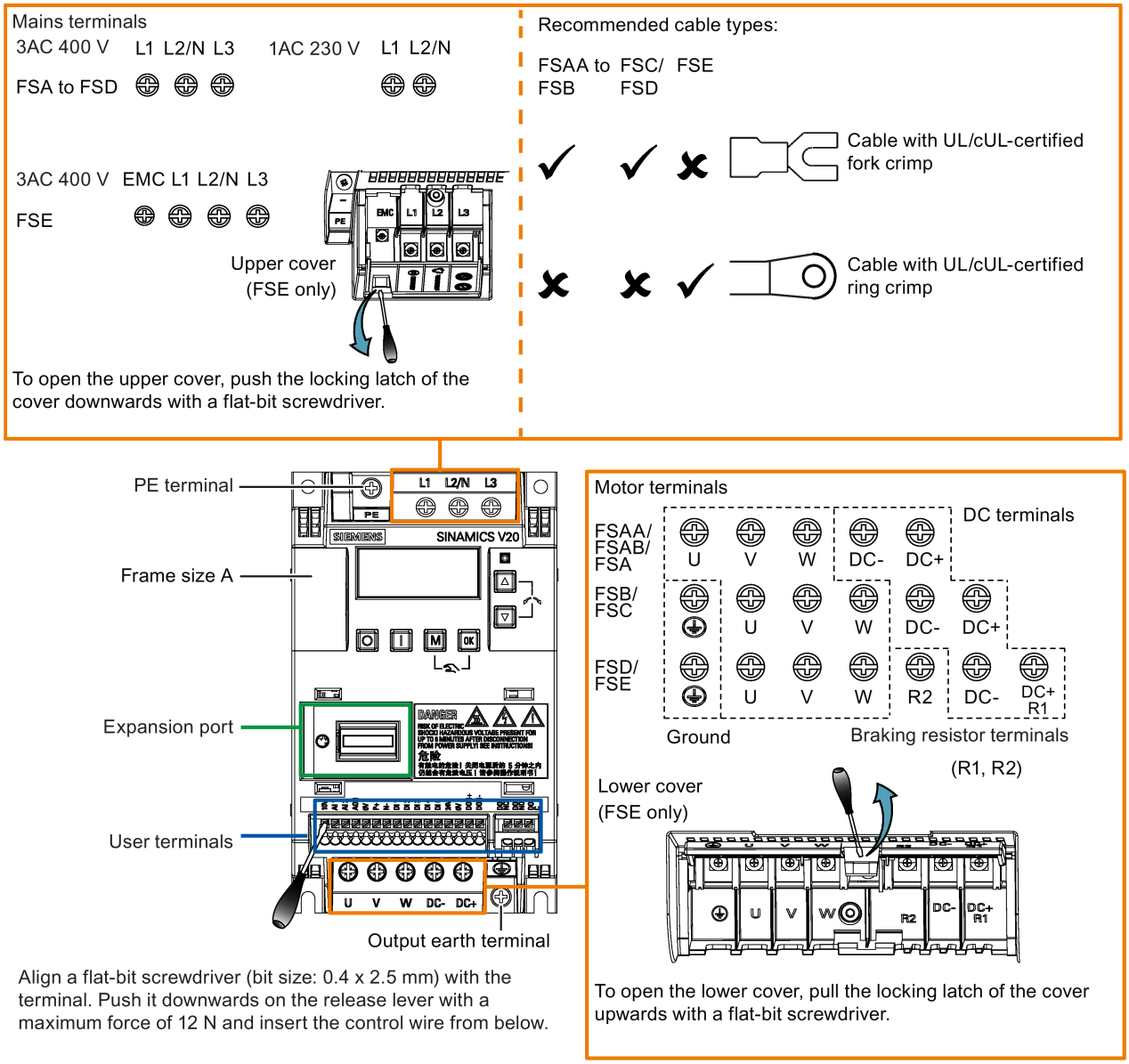

User terminals for FSAA/FSAB:

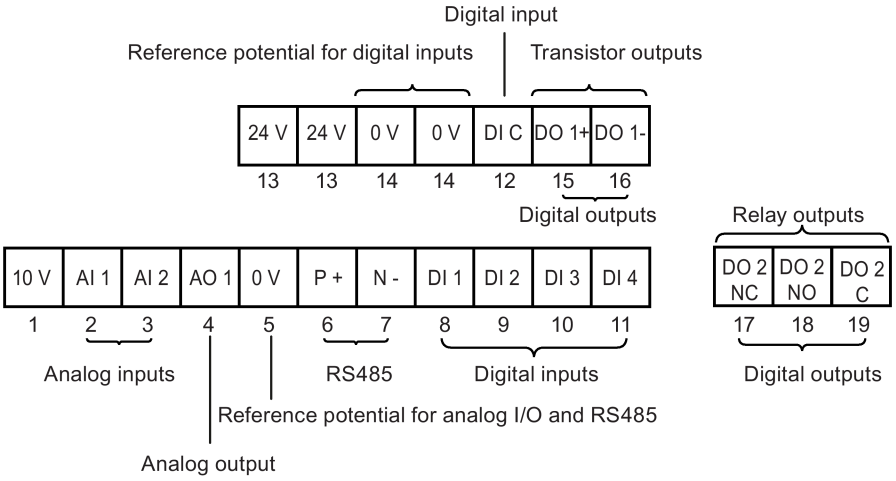

User terminals for FSA to FSE:

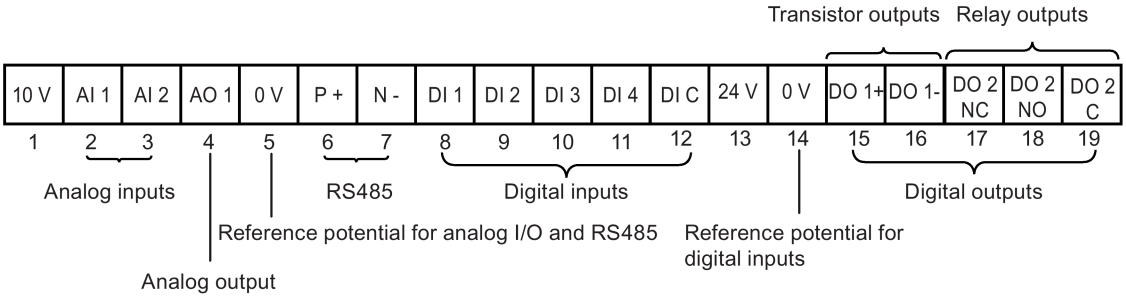

Note

To disconnect the integrated EMC filter on FSE from the ground, you can use a Pozidriv or flat-bit screwdriver to remove the EMC screw.

NOTICE

Damage to the mains terminals

During electrical installation of the inverter frame sizes A and B, use stranded cables or cables with UL/cUL-certified, suitable fork crimps rather than solid cables or cables with pin crimps for mains terminal connection; for frame size E, use cables with UL/cUL-certified ring crimps for the mains terminal connections.

Recommended cable cross-sections and screw tightening torques

Frame size	Rated output power	Mains and PE terminals		Motor / DC / braking resistor / output earth terminals	
		Cable cross-section*	Screw tightening torque (tolerance: ± 10%)	Cable cross-section*	Screw tightening torque (tolerance: ± 10%)
400 V					
A	0.37 kW to 0.75 kW	1.0 mm²(12)	1.0 Nm	1.0 mm² (12)	1.0 Nm
	1.1 kW to 2.2 kW	1.5 mm² (12)		1.5 mm² (12)	
B	3.0 kW to 4.0 kW	6 mm² (10)		6 mm² (10)	1.5 Nm
C	5.5 kW	6 mm² (10)	2.4 Nm	6 mm² (10)	2.4 Nm
D	7.5 kW	6 mm² (10)		6 mm² (10)	
	11 kW to 15 kW	10 mm²(6)		10 mm² (6)	
E	18.5 kW (HO)	10 mm² (6)		6 mm² (8)	
	22 kW (LO)	16 mm² (4)		10 mm² (6)	
	22 kW (HO)	16 mm² (4)		10 mm² (6)	
	30 kW (LO)	25 mm² (3)		16 mm² (4)	

Frame size	Rated output power	Mains and PE terminals		Motor / DC / braking resistor / output earth terminals	
		Cable cross-section*	Screw tightening torque (tolerance: ± 10%)	Cable cross-section*	Screw tightening torque (tolerance: ± 10%)
230 V					
AA/AB/A	0.12 kW to 0.25 kW	1.5 mm^2 (12)	1.0 Nm	1.0 mm^2 (12)	1.0 Nm
	0.37 kW to 0.55 kW	2.5 mm^2 (12)			
	0.75 kW	4.0 mm^2 (12)			
B	1.1 kW to 1.5 kW	6.0 mm^2 ** (10)		2.5 mm^2 (10)	1.5 Nm
C	2.2 kW to 3.0 kW	10 mm^2 (6)	2.4 Nm	4.0 mm^2 (8)	2.4 Nm

* Data in brackets indicates the corresponding AWG values.

** With a UL/cUL-certified, suitable fork crimp

WARNING

Danger to life due to fire spreading because of an unsuitable or improperly installed braking resistor

Using an unsuitable or improperly installed braking resistor can cause fires and smoke to develop. Fire and smoke development can cause severe personal injury or material damage.

- Only use braking resistors that are approved for the inverter.
- Install the braking resistor in accordance with regulations.
- Monitor the temperature of the braking resistor.

Maximum motor cable lengths

Inverter variant	Maximum cable length					
	EMC compliant		Without output reactor		With output reactor	
400 V	**With integrated EMC filter** [1]	**With external line filter** [2]	**Unshielded**	**Shielded**	**Unshielded**	**Shielded**
FSA	10 m	25 m	50 m	25 m	150 m	150 m
FSB to FSD	25 m	25 m	50 m	25 m	150 m	150 m
FSE	50 m	25 m	100 m	50 m	300 m	200 m
230 V	**With integrated EMC filter**	**With external line filter** [3]	**Unshielded**	**Shielded**	**Unshielded**	**Shielded**
FSAA/FSAB	5 m [3]	5 m	50 m	25 m	200 m	200 m
FSA	10 m [2]	5 m	50 m	25 m	200 m	200 m
FSB to FSC	25 m [2]	5 m	50 m	25 m	200 m	200 m

[1] EMC (RE/CE C3) compliant, second environment (industrial area). RE/CE C3 refers to EMC compliance to EN61800-3 Category C3 for Radiated and Conducted Emissions.

[2] EMC (RE/CE C2) compliant, first environment (residential area). RE/CE C2 refers to EMC compliance to EN61800-3 Category C2 for Radiated and Conducted Emissions. For the specifications of external line filters, refer to the SINAMICS V20 Inverter Operating Instructions.

[3] EMC (RE/CE C1) compliant, first environment (residential area). RE/CE C1 refers to EMC compliance to EN61800-3 Category C1 for Radiated and Conducted Emissions.

Permissible I/O terminal cable cross-sections

Cable type	Permissible cable cross-section
Solid or stranded cable	0.5 mm^2 to 1.5 mm^2
Ferrule with insulating sleeve	0.25 mm^2

2.3 Technical specifications

	Three phase AC 400 V inverters	Single phase AC 230 V inverters
Line supply characteristics [1]		
Voltage range	380 V to 480 V AC (tolerance: -15 % to +10 %) [2] 47 Hz to 63 Hz Current derating exists at the input voltages / switching frequencies higher than 400 V / 4kHz.	200 V to 240 V AC (tolerance: -15 % to +10 %) [2] 47 Hz to 63 Hz Current derating exists at the input voltages / switching frequencies higher than 230 V / 8kHz.
Overvoltage category	EN 60664-1 Category III	
Permissible supply configuration	TN, TT, IT: FSA to FSE (unfiltered); FSE (filtered) [3] TN, TT with grounded neutral: FSA to FSE	TN, TT: FSAA to FSC (unfiltered) TN, TT with grounded neutral: FSAA to FSC IT: FSAA/FSAB (unfiltered)
Supply environment	Second environment (private power network)	First environment (public power network)
Overload current	Rated power 0.12 kW to 15 kW	150% rated for 60 seconds
	Rated power 18.5 kW (HO)/22 kW (HO)	
	Rated power 22 kW (LO)/30 kW (LO)	110% rated for 60 seconds
Environmental conditions		
Surrounding air temperature	- 10 °C to 40 °C: without derating 40 °C to 60 °C: with derating (UL/cUL-compliant: 40 °C to 50 °C, with derating)	
Storage temperature	- 40 °C to + 70 °C	
Protection class	IP 20	
Maximum humidity level	95% (non-condensing)	
Shock and vibration	Long-term storage in the transport packaging according to EN 60721-3-1 Class 1M2	
	Transport in the transport packaging according to EN 60721-3-2 Class 2M3	
	Vibration during operation according to EN 60721-3-3 Class 3M2	
Operating altitude	Up to 4000 m above sea level 1000 m to 4000 m: output current derating 2000 m to 4000 m: input voltage derating	
Environmental classes	Pollution degree: 2 Solid particles: class 3S2 Chemical gases: class 3C2 (SO_2, H_2S) Climate class: 3K3	

[1] For more information about current deratings, see the SINAMICS V20 Inverter Operating Instructions.

[2] When the input voltage is below the rated value, current deratings are permissible and therefore the voltage-dependent speed and/or torque may be reduced.

[3] To operate FSE (filtered) on IT power supply, make sure you remove the screw for the EMC filter.

3 Commissioning

WARNING

Hot surface

During operation and for a short time after switching-off the inverter, the marked surfaces of the inverter can reach a high temperature. Avoid coming into direct contact with these surfaces.

3.1 The built-in Basic Operator Panel (BOP)

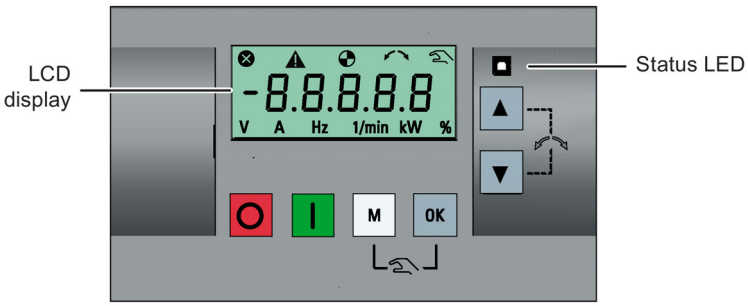

Button functions

O	**Stops the inverter**	
	Single press	OFF1 stop reaction in HAND mode. **Exception:** This button is inactive if the inverter is configured for control from terminals or USS/MODBUS on RS485 (P0700=2 or P0700=5) in AUTO mode.
	Double press (< 2 s) or long press (> 3 s)	OFF2 stop reaction: the inverter allows the motor to coast to a standstill without using any ramp-down timings.
I	Starts the inverter in HAND / JOG /AUTO mode. **Exception:** This button is inactive if the inverter is configured for control from terminals or USS/MODBUS on RS485 (P0700=2 or P0700=5) in AUTO mode.	
M	**Multi-function button**	
	Short press (< 2 s)	• Enters the parameter setting menu or moves to the next screen in the setup menu • Restarts the digit by digit editing on the selected item • Returns to the fault code display • Press twice in digit by digit editing to discard change and return
	Long press (> 2 s)	• Returns to the status screen • Enters the setup menu
OK	Short press (< 2 s)	• Switches between status values • Enters edit value mode or change to the next digit • Clears faults • Returns to the fault code display
	Long press (> 2 s)	• Quick parameter number or value edit • Accesses fault information data
M + OK	Press to switch between HAND (with hand icon) / JOG (with flashing hand icon) / AUTO (no icon) mode. **Note:** Jog mode is only available if the motor is stopped.	
▲	• Moves the selection up through a menu, increases a value or a setpoint. • Long press (>2 s) to quickly scroll up the values.	

▼	• Moves the selection down through a menu, decreases a value or a setpoint. • Long press (>2 s) to quickly scroll down the values.
▲ + ▼	Reverses the direction of rotation of the motor.

Note

Unless otherwise specified, operations of the above keys always indicate short press (< 2 s).

Inverter status icons

⊗	Inverter has at least one pending fault.	
⚠	Inverter has at least one pending alarm.	
◐	◐ :	Inverter is running (motor frequency may be 0 rpm).
	◐ (flashing):	Inverter may be energized unexpectedly (for example, in frost protection mode).
↶↷	Motor rotates in the reversed direction.	
✋	✋ :	Inverter is in HAND mode.
	✋ (flashing):	Inverter is in JOG mode.

Menu structure

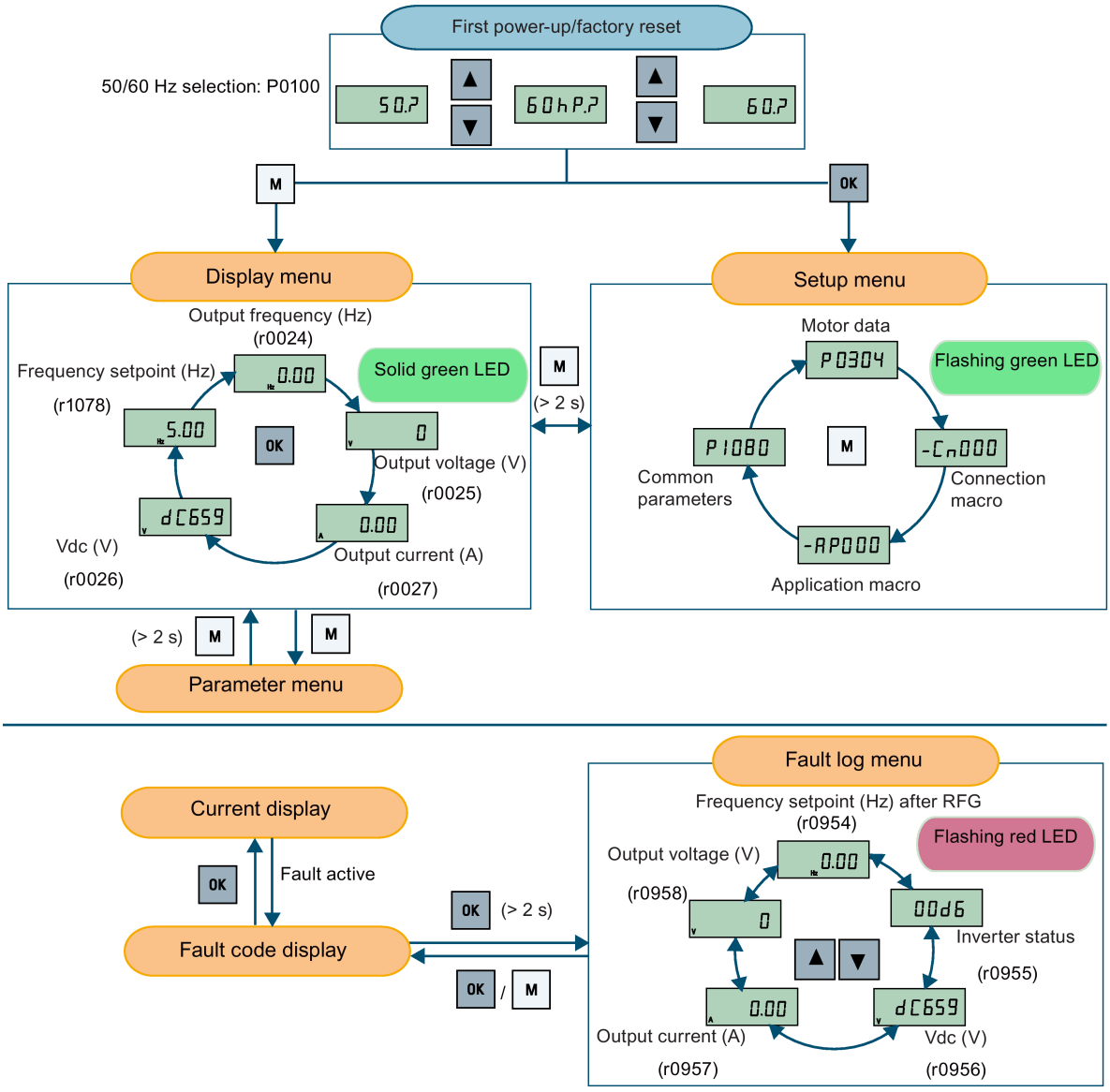

Digit-by-digit editing of parameters

Example: editing parameter numbers

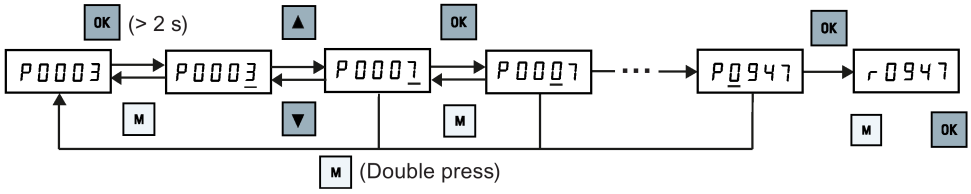

3.2 Quick commissioning

3.2.1 Powering up and setting to factory defaults

Operating sequence

1. Switch on the inverter and then start from the display menu.
2. Press M for less than 2 s to switch to the parameter menu.
3. Press ▲ or ▼ to select P0010 and set P0010 = 30 with OK.
4. Press ▲ to select P0970 and set P0970 =1 or P0970 = 21 with OK.

Note

This section describes how to perform the quick commissioning through the setup menu. If you are used to commissioning the inverter by setting parameters of your choice in the parameter menu, refer to the SINAMICS V20 Inverter Operating Instructions for a detailed description.

Structure of the setup menu

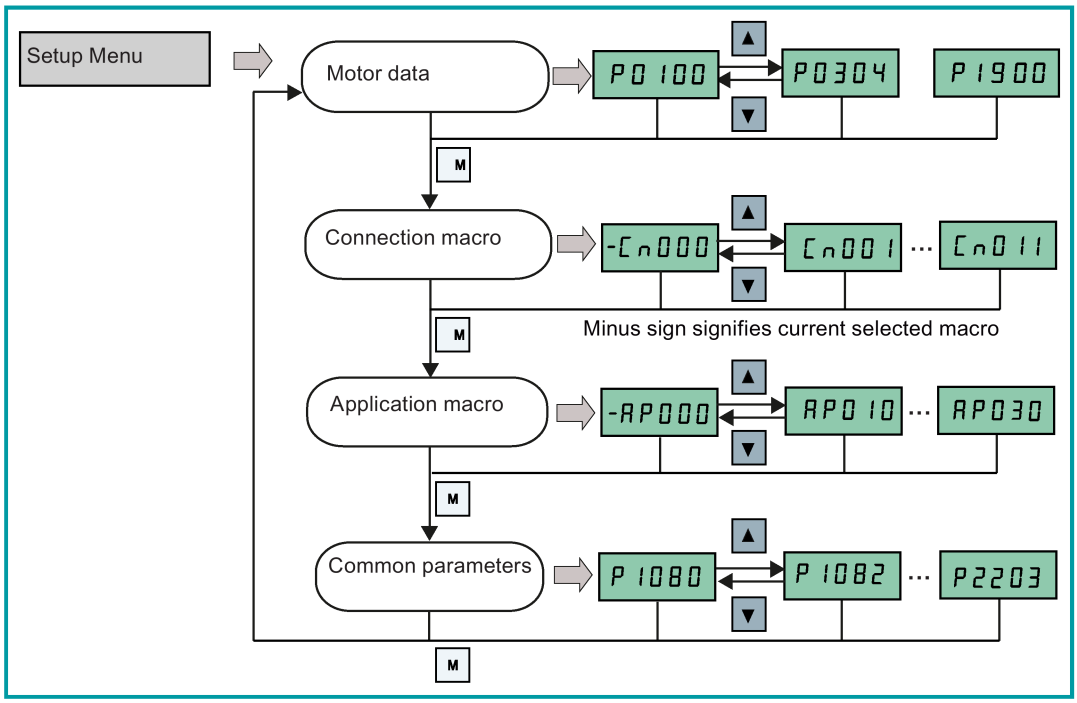

Overview of connection and application macros

Connection macros (Page 18)				Application macros (Page 21)	
Cn000	No chosen connection macro	Cn006	External push button control	AP000	Factory default setting
Cn001	BOP as the only control source	Cn007	External push buttons with analog control	AP010	Simple pump applications
Cn002	Control from terminals (PNP/NPN)	Cn008	PID control with analog reference	AP020	Simple fan applications
Cn003	Fixed speeds	Cn009	PID control with the fixed value reference	AP021	Compressor applications
Cn004	Fixed speeds in binary mode	Cn010	USS control	AP030	Conveyor applications
Cn005	Analog input and fixed frequency	Cn011	MODBUS RTU control		

3.2.2 Setting motor data

Parameter	Description	Parameter	Description
P0100	50/60 Hz selection =0: Europe [kW], 50 Hz (factory default) =1: North America [hp], 60 Hz =2: North America [kW], 60 Hz	P0309[0] ●	Rated motor efficiency [%]
P0304[0] ●	Rated motor voltage [V]	P0310[0] ●	Rated motor frequency [Hz]
P0305[0] ●	Rated motor current [A]	P0311[0] ●	Rated motor speed [RPM]
P0307[0] ●	Rated motor power [kW/hp]	P1900	Select motor data identification = 0: Disabled = 2: Identification of all parameters in standstill
P0308[0] ●	Rated motor power factor (cosφ)		

Note: "●" indicates that the value of this parameter must be entered according to the rating plate of the motor. If P0100 = 1 (60 Hz [hp]), P0308[0] is invisible which indicates that this parameter is unnecessary for configuration.

3.2.3 Setting connection macros

Functionality

This menu selects which macro is required for standard wiring arrangements. The default one is "Cn000" for connection macro 0.

Connection macros

Cn001 - BOP as the only control source	Cn002 - Control from terminals (PNP/NPN)
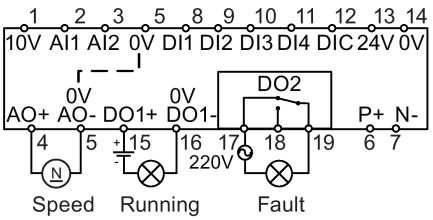 0~20 mA=0~50/60 Hz	External control - Potentiometer with setpoint Both NPN and PNP can be realized with the same parameters. You can change the connection of the digital input common terminal to 24 V or 0 V to decide the mode. 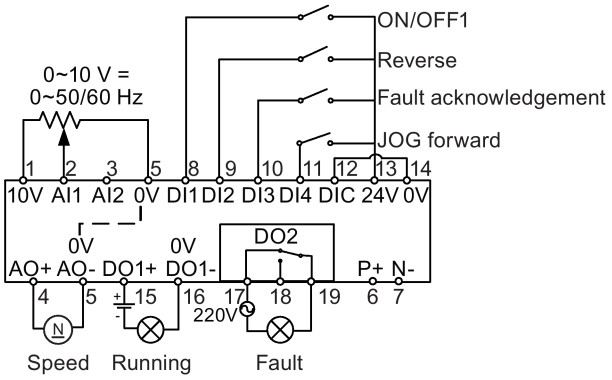 0~20 mA = 0~50/60 Hz **PNP**

Cn003 - Fixed speeds	Cn004 - Fixed speeds in binary mode
Three fixed speeds with ON/OFF If several digital inputs are active at the same time, the selected frequencies are summed, for example, FF1 + FF2 + FF3. 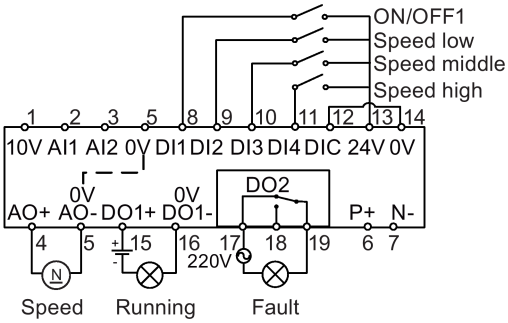 0~20 mA=0~50/60 Hz	Fixed speeds with ON command in binary mode Up to 16 different fixed frequency values (0 Hz, P1001 ... P1015) can be selected by the fixed frequency selectors (P1020 ... P1023). 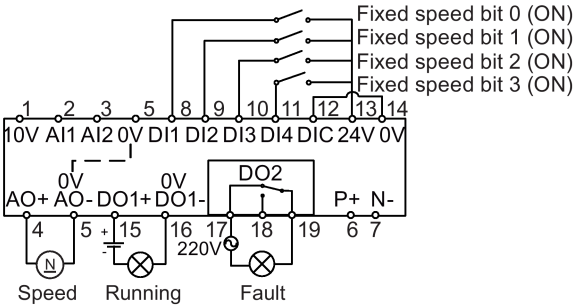 0~20 mA=0~50/60 Hz
Cn005 - Analog input and fixed frequency	**Cn006 - External push button control**
The analog input works as an additional setpoint. If digital input 2 and digit input 3 are active together, the selected frequencies are summed, that is, FF1 + FF2. 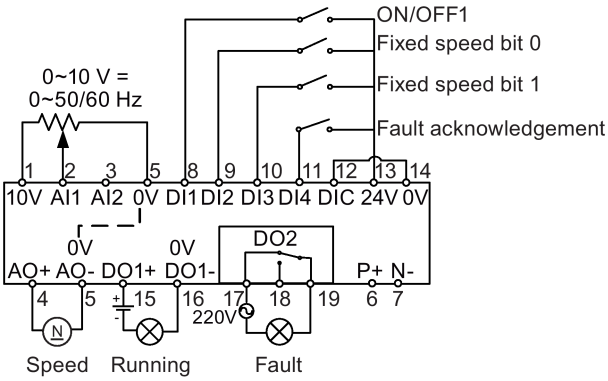 0~20 mA = 0~50/60 Hz	Note that the command sources are pulse signals. 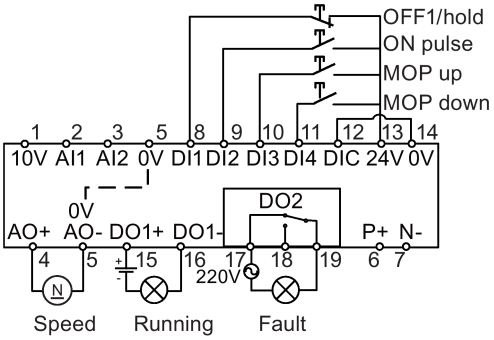 0~20 mA=0~50/60 Hz
Cn007 - External push buttons with analog control	**Cn008 - PID control with analog reference**
Note that the command sources are pulse signals. 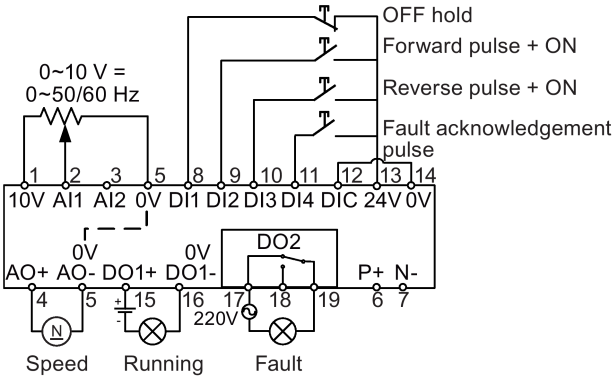 0~20 mA=0~50/60 Hz	If a negative setpoint for the PID control is desired, change the setpoint and feedback wiring as needed. 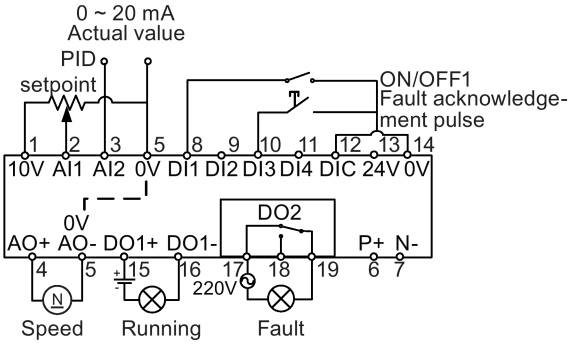 0~20 mA=0~50/60 Hz

Cn009 - PID control with the fixed value reference

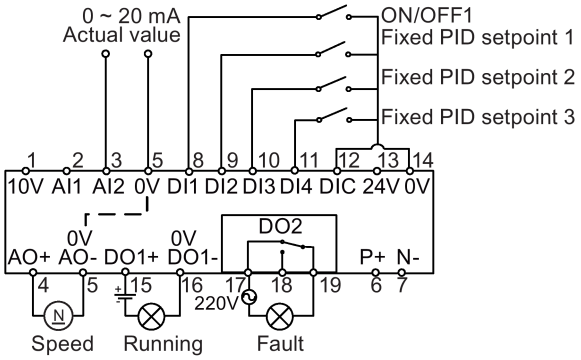

0~20 mA=0~50/60 Hz

Cn010 - USS control

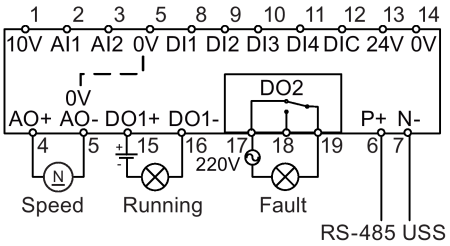

0~20 mA=0~50/60 Hz

Cn011 - MODBUS RTU control

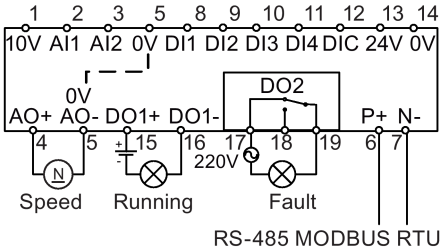

0~20 mA=0~50/60 Hz

Parameters for setting the connections macros

	Description	Default values for connection macros (Cn...)										
		001	002	003	004	005	006	007	008	009	010	011
P0700[0]	Selection of command source	1	2	2	2	2	2	2	2	2	5	5
P0701[0]	Function of digital input 1	-	1	1	15	1	2	1	1	1	-	-
P0702[0]	Function of digital input 2	-	12	15	16	15	1	2	-	15	-	-
P0703[0]	Function of digital input 3	-	9	16	17	16	13	12	9	16	-	-
P0704[0]	Function of digital input 4	-	10	17	18	9	14	9	-	17	-	-
P0727[0]	Selection of 2/3-wire method	-	-	-	-	-	3	2	-	-	-	-
P0731[0]	BI: Function of digital output 1	52.2	52.2	52.2	52.2	52.2	52.2	52.2	52.2	-	-	-
P0732[0]	BI: Function of digital output 2	52.3	52.3	52.3	52.3	52.3	52.3	52.3	52.3	-	-	-
P0756[1]	Type of analog input	-	-	-	-	-	-	-	2	-	-	-
P0771[0]	CI: Analog output	21	21	21	21	21	21	21	21	-	-	-
P0810[0]	BI: CDS bit 0 (Hand/Auto)	0	-	-	-	-	-	-	-	-	-	-
P0840[0]	BI: ON/OFF1	-	-	-	1025.0	-	-	-	-	-	-	-
P1000[0]	Selection of frequency	1	2	3	3	23	1	2	-	-	5	5
P1001[0]	Fixed frequency 1	-	-	10	-	10	-	-	-	-	-	-
P1002[0]	Fixed frequency 2	-	-	15	-	15	-	-	-	-	-	-
P1003[0]	Fixed frequency 3	-	-	25	-	-	-	-	-	-	-	-
P1016[0]	Fixed frequency mode	-	-	1	2	1	-	-	-	-	-	-
P1020[0]	BI: Fixed frequency selection bit 0	-	-	722.1	722.0	722.1	-	-	-	-	-	-
P1021[0]	BI: Fixed frequency selection bit 1	-	-	722.2	722.1	722.2	-	-	-	-	-	-
P1022[0]	BI: Fixed frequency selection bit 2	-	-	722.3	722.2	-	-	-	-	-	-	-
P1023[0]	BI: Fixed frequency selection bit 3	-	-	-	722.3	-	-	-	-	-	-	-
P1040[0]	Setpoint of the MOP	-	-	-	-	-	0	-	-	-	-	-

	Description	Default values for connection macros (Cn...)										
		001	002	003	004	005	006	007	008	009	010	011
P1047[0]	MOP ramp-up time of the RFG	-	-	-	-	-	10	-	-	-	-	-
P1048[0]	MOP ramp-down time of the RFG	-	-	-	-	-	10	-	-	-	-	-
P1074[0]	BI: Disable additional setpoint	-	-	-	-	1025.0	-	-	-	-	-	-
P2010[0]	USS/MODBUS baudrate	-	-	-	-	-	-	-	-	-	8	6
P2011[0]	USS address	-	-	-	-	-	-	-	-	-	1	-
P2012[0]	USS PZD length	-	-	-	-	-	-	-	-	-	2	-
P2013[0]	USS PKW length	-	-	-	-	-	-	-	-	-	127	-
P2014[0]	USS/MODBUS telegram off time	-	-	-	-	-	-	-	-	-	500	100
P2021[0]	MODBUS address	-	-	-	-	-	-	-	-	-	-	1
P2022[0]	MODBUS reply timeout	-	-	-	-	-	-	-	-	-	-	1000
P2023[0]	RS485 protocol selection	-	-	-	-	-	-	-	-	-	1	2
P2034	MODBUS parity on RS485	-	-	-	-	-	-	-	-	-	-	2
P2035	MODBUS stop bits on RS485	-	-	-	-	-	-	-	-	-	-	1
P2200[0]	Enable PID controller	-	-	-	-	-	-	-	1	1	-	-
P2216[0]	Fixed PID setpoint mode	-	-	-	-	-	-	-	-	1	-	-
P2220[0]	BI: Fixed PID setpoint select bit 0	-	-	-	-	-	-	-	-	722.1	-	-
P2221[0]	BI: Fixed PID setpoint select bit 1	-	-	-	-	-	-	-	-	722.2	-	-
P2222[0]	BI: Fixed PID setpoint select bit 2	-	-	-	-	-	-	-	-	722.3	-	-
P2253[0]	CI: PID setpoint	-	-	-	-	-	-	-	755.0	2224	-	-
P2264[0]	CI: PID feedback	-	-	-	-	-	-	-	755.1	755.1	-	-

3.2.4 Setting application macros

Functionality

This menu defines certain common applications. Each application macro provides a set of parameter settings for a specific application. After you select an application macro, the corresponding settings are applied to the inverter to simplify the commissioning process.

Application macro specific parameters

Parameter	Description	Factory default	Default for application macro				Remarks
			AP010	AP020	AP021	AP030	
P1080[0]	Minimum frequency	0	15	20	-	-	Inverter running at a lower speed inhibited
P1300[0]	Control mode	0	7	7	0	1	=7: Quadratic V/f =0: Linear V/f =1: V/f with FCC
P1110[0]	BI: Inhibit negative frequency setpoint	0	1	-	-	-	Reverse rotation inhibited
P1200[0]	Flying start	0	-	2	-	-	Search for the speed of the running motor with a heavy inertia load so that the motor runs up to the setpoint
P1210[0]	Automatic restart	1	2	2	-	-	Restart after mains blackout
P1120[0]	Ramp-up time	10	10	10	10	5	Ramp-up time from zero to maximum frequency
P1121[0]	Ramp-down time	10	10	20	10	5	Ramp-down time from maximum frequency to zero
P1312[0]	Starting boost	0	-	-	30	30	Boost only effective when accelerating for the first time (standstill)
P1311[0]	Acceleration boost	0	-	-	0	-	Boost only effective when accelerating or braking
P1310[0]	Continuous boost	50		-	50	-	Additional boost over the complete frequency range

3.2.5 Setting common parameters

Parameter	Description	Parameter	Description
P1080[0]	Minimum motor frequency	P1001[0]	Fixed frequency setpoint 1
P1082[0]	Maximum motor frequency	P1002[0]	Fixed frequency setpoint 2
P1120[0]	Ramp-up time	P1003[0]	Fixed frequency setpoint 3
P1121[0]	Ramp-down time	P2201[0]	Fixed PID frequency setpoint 1
P1058[0]	JOG frequency	P2202[0]	Fixed PID frequency setpoint 2
P1060[0]	JOG ramp-up time	P2203[0]	Fixed PID frequency setpoint 3
P1061[0]	JOG ramp-down time		

3.3 Restoring to defaults

Parameter	Function	Setting
P0003	User access level	= 1 (standard user access level)
P0010	Commissioning parameter	= 30 (factory setting)
P0970	Factory reset	= 1: parameter reset to user defaults if stored, else factory defaults (restoring to user defaults) = 21: parameter reset to factory defaults deleting user defaults if stored (restoring to factory defaults)

After the setting for P0970, the inverter displays "8 8 8 8 8" and then the screen shows "P0970". P0970 and P0010 are automatically reset to their original value 0.

4 Technical support information

Country	Hotline
China	+86 400 810 4288
France	+33 0821 801 122
Germany	+49 (0) 911 895 7222
Italy	+39 (02) 24362000
Brazil	+55 11 3833 4040
India	+91 22 2760 0150
Korea	+82 2 3450 7114
Turkey	+90 (216) 4440747
USA	+1 423 262 5710
Further service contact information: Support contacts (https://support.industry.siemens.com/cs/ww/en/ps) Manual download (https://support.industry.siemens.com/cs/ww/en/ps/13208/man)	

A Parameters, faults, and alarms

A.1 Parameter list

Parameter	Description		Range	Factory default	Acc. level
P0003	User access level		0 - 4	1	1
	0	Use-defined parameter list (defines a limited set of parameters to which the end user has access. See P0013 for details on use.)			
	1	Standard (allows access into most frequently used parameters)			
	2	Extended (allows extended access to more parameters			
	3	Expert (for expert use only)			
	4	Service (only for use by authorized service personnel, password protected)			
P0004	Parameter filter		0 - 24	0	1
	0	All parameters	12	Inverter features	
	2	Inverter	13	Motor control	
	3	Motor	19	Motor identification	
	5	Technology application / units	20	Communication	
	7	Commands, binary I/O	21	Warnings / faults / monitoring	
	8	Analog input and analog output	22	Technology controller	
	10	Setpoint channel / RFG	24	List of modified parameters	
P0005	Parameter display selection		0 - 9580	0	2
	Selects default display parameter (inverter display).				
Example:	The inverter displays the value of the parameter selected here by default.				
P0010	Commissioning parameter		0 - 30	0	1
	0	Ready	29	Download	
	1	Quick commissioning	30	Factory setting	
	2	Inverter			
r0018	Firmware version		-	-	1
r0021	CO: Actual filtered frequency [Hz]		-	-	2
r0025	CO: Actual output voltage [V]		-	-	2
r0026[0]	CO: Actual filtered DC-link voltage [V]		-	-	2
r0027	CO: Actual output current [A]		-	-	2
r0031	CO: Actual filtered torque [Nm]		-	-	2
r0032	CO: Actual filtered power		-	-	2
r0035[0...2]	CO: Actual motor temperature [°C]		-	-	2
r0039	CO: Energy consumpt. meter [kWh]		-	-	2
P0040	Reset energy consumpt. and energy saved meter		0 - 1	0	2
	0	No reset			
	1	Reset r0039 to 0			
P0042[0...1]	Energy saving scaling		0.000 - 100.00	0.000	2
Index:	[0]	Factor for kWh to currency conversion			
	[1]	Factor for kWh to CO2 conversion			
r0043[0...2]	Energy saved [kWh]		-	-	2
r0050	CO / BO: Active command data set		-	-	2
r0051[0...1]	CO: Active inverter data set (DDS)		-	-	2
r0052.0...15	CO / BO: Active status word 1		-	-	2

Parameter	Description		Range	Factory default		Acc. level
	Bit	Signal	1 signal	Bit	Signal	1 signal
	00	Inverter ready	Yes	01	Inverter ready to run	Yes
	02	Inverter running	Yes	03	Inverter fault active	Yes
	04	OFF2 active	No	05	OFF3 active	No
	06	ON inhibit active	Yes	07	Inverter warning active	Yes
	08	Deviation setpoint / act. value	No	09	PZD control	Yes
	10	|f_act| >= P1082 (f_max)	Yes	11	Warning: Motor current / torque limit	No
	12	Brake open	Yes	13	Motor overload	No
	14	Motor runs right	Yes	15	Inverter overload	No
r0053.0...15	CO / BO: Active status word 2		-	-		2
	Bit	Signal name	1 signal	Bit	Signal name	1 signal
	00	DC brake active	Yes	01	|f_act| > P2167 (f_off)	Yes
	02	|f_act| > P1080 (f_min)	Yes	03	Act. current |r0068| >= P2170	Yes
	04	|f_act| > P2155 (f_1)	Yes	05	|f_act| <= P2155 (f_1)	Yes
	06	f_act >= setpoint (f_set)	Yes	07	Act. unfilt. Vdc < P2172	Yes
	08	Act. unfilt. Vdc > P2172	Yes	09	Ramping finished	Yes
	10	PID output r2294 == P2292 (PID_min)	Yes	11	PID output r2294 == P2291 (PID_max)	Yes
	14	Download Data set 0 from external storage	Yes	15	Download Data set 1 from external storage	Yes
P0100	Europe / North America		0 - 2	0		1
	0	Europe [kW], motor base frequency is 50 Hz				
	1	North America [hp], motor base frequency is 60 Hz				
	2	North America [kW], motor base frequency is 60 Hz				
r0206	Rated inverter power [kW] / [hp]		-	-		2
r0207[0...2]	Rated inverter current [A]		-	-		2
r0208	Rated inverter voltage [V]		-	-		2
r0209	Maximum inverter current [A]		-	-		2
P0301[0...2]	Easy motor data, rated motor power [kW]		0 - 2000	0		1
P0304[0...2]	Rated motor voltage [V]		10 - 2000	400		1
P0305[0...2]	Rated motor current [A]		0.01 - 10000.00	1.86		1
P0307[0...2]	Rated motor power		0.01 - 2000.00	0.75		1
P0308[0...2]	Rated motor cosφ		0.000 - 1.000	0.000		1
P0309[0...2]	Rated motor efficiency [%]		0.0 - 99.9	0.0		1
P0310[0...2]	Rated motor frequency [Hz]		12.00 - 550.00	50.00		1
P0311[0...2]	Rated motor speed [RPM]		0 - 40000	1395		1
P0335[0...2]	Motor cooling		0 - 3	0		2
	0	Self-cooled: Shaft mounted fan attached motor (IC410 or IC411)				
	1	Force-cooled: Separately powered cooling fan (IC416)				
	2	Self-cooled and internal fan				
	3	Force-cooled and internal fan				
P0340[0...2]	Calculation of motor parameters		0 - 4	0		2
	0	No calculation	3	Calculation of V/f control data		
	1	Complete parameterization	4	Calculation of controller settings only		
	2	Calculation of equivalent circuit data				
P0507	Application macro		0 - 255	0		1
r0512	CO: Scaled filtered frequency		-	-		2
P0604[0...2]	Threshold motor temperature [°C]		0.0 - 200.0	130.0		2

Parameter	Description		Range	Factory default	Acc. level
P0640[0...2]	Motor overload factor [%]		10.0 - 400.0	150.0	2
P0700[0...2]	Selection of command source		0 - 5	1	1
	0	Factory default setting	2	Terminal	
	1	Operator panel (keypad)	5	USS / MODBUS on RS485	
P0701[0...2]	Function of digital input 1		0 - 99	0	2
	0	Digital input disabled	15	Fixed frequency selector bit0	
	1	ON / OFF1	16	Fixed frequency selector bit1	
	2	ON reverse / OFF1	17	Fixed frequency selector bit2	
	3	OFF2 - coast to standstill	18	Fixed frequency selector bit3	
	4	OFF3 - quick ramp-down	22	QuickStop Source 1	
	5	ON / OFF2	23	QuickStop Source 2	
	9	Fault acknowledge	24	QuickStop Override	
	10	JOG right	25	DC brake enable	
	11	JOG left	27	Enable PID	
	12	Reverse	29	External trip	
	13	MOP up (increase frequency)	33	Disable additional freq setpoint	
	14	MOP down (decrease frequency)	99	Enable BICO parameterization	
P0702[0...2]	Function of digital input 2		0 - 99	0	2
P0703[0...2]	Function of digital input 3		0 - 99	9	2
P0704[0...2]	Function of digital input 4		0 - 99	15	2
P0712 [0...2]	Analog / digital input 1		0 - 99	0	2
P0713[0...2]	Analog / digital input 2		0 - 99	0	2
P0717	Connection macro		0 - 255	0	1
r0722.0...12	CO / BO: Digital input values		-	-	2
P0727[0...2]	Selection of 2 / 3-wire method		0 - 3	0	2
	0	Siemens (start / dir)	2	3-wire (fwd / rev)	
	1	2-wire (fwd / rev)	3	3-wire (start / dir)	
P0731[0...2]	BI: Function of digital output 1		0 - 4294967295	52.3	2
P0732[0...2]	BI: Function of digital output 2		0 - 4294967295	52.7	2
r0752[0...1]	Actual analog input [V] or [mA]		-	-	2
r0754[0...1]	Actual analog input value after scaling [%]		-	-	2
r0755[0...1]	CO: Actual analog input after scaling [4000h]		-	-	2
P0756[0...1]	Type of analog input		0 - 4	0	2
	0	Unipolar voltage input (0 to +10 V)			
	1	Unipolar voltage input with monitoring (0 to 10 V)			
	2	Unipolar current input (0 to 20 mA)			
	3	Unipolar current input with monitoring (0 to 20 mA)			
	4	Bipolar voltage input (-10 V to +10 V)			
P0757[0...1]	Value x1 of analog input scaling		-20 - 20	0	2
P0758[0...1]	Value y1 of analog input scaling [%]		-99999.9 - 99999.9	0.0	2
P0759[0...1]	Value x2 of analog input scaling		-20 - 20	10	2
P0760[0...1]	Value y2 of analog input scaling [%]		-99999.9 - 99999.9	100.0	2
P0761[0...1]	Width of analog input deadband		0 - 20	0	2
P0771[0]	CI: Analog output		0 - 4294967295	21[0]	2
P0773[0]	Smooth time analog output [ms]		0 - 1000	2	2
r0774[0]	Actual analog output value [V] or [mA]		-	-	2
P0775[0]	Permit absolute value		0 - 1	0	2
P0777[0]	Value x1 of analog output scaling [%]		-99999 - 99999	0.0	2
P0778[0]	Value y1 of analog output scaling		0 - 20	0	2

Parameter	Description		Range	Factory default	Acc. level
P0779[0]	Value x2 of analog output scaling [%]		-99999 - 99999	100.0	2
P0780[0]	Value y2 of analog output scaling		0 - 20	20	2
P0781[0]	Width of analog output deadband		0 - 20	0	2
r0785.0	CO / BO: Status word of analog output		-	-	2
P0809[0...2]	Copy command data set (CDS)		0 - 2	[0] 0 [1] 1 [2] 0	2
Index:	[0]	Copy from CDS			
	[1]	Copy to CDS			
	[2]	Start copy			
P0810	BI: command data set bit 0 (Hand / Auto)		0 - 4294967295	0	2
P0811	BI: command data set bit 1		0 - 4294967295	0	2
P0819[0...2]	Copy inverter data set (DDS)		0 - 2	[0] 0 [1] 1 [2] 0	2
Index:	[0]	Copy from DDS			
	[1]	Copy to DDS			
	[2]	Start copy			
P0927	Parameter changeable via specified interfaces		0 - 15	15	2
r0947[0...63]	CO: Last fault code		-	-	2
	Displays fault history.				
P0970	Factory reset		0 - 21	0	1
	0	Disabled			
	1	Parameter reset			
	21	User Default Parameter Reset			
P1000[0...2]	Selection of frequency setpoint		0 - 77	1	1
	0	No main setpoint	30	No main setpoint + Fixed frequency	
	1	MOP setpoint	31	MOP setpoint + Fixed frequency	
	2	Analog setpoint	32	Analog setpoint + Fixed frequency	
	3	Fixed frequency	33	Fixed frequency + Fixed frequency	
	5	USS/MODBUS on RS485	35	USS/MODBUS on RS485 + Fixed frequency	
	7	Analog setpoint 2	37	Analog setpoint 2 + Fixed frequency	
	10	No main setpoint + MOP setpoint	50	No main setpoint + USS/MODBUS on RS485	
	11	MOP setpoint + MOP setpoint	51	MOP setpoint + USS/MODBUS on RS485	
	12	Analog setpoint + MOP setpoint	52	Analog setpoint + USS/MODBUS on RS485	
	13	Fixed frequency + MOP setpoint	53	Fixed frequency + USS/MODBUS on RS485	
	15	USS/MODBUS on RS485 + MOP setpoint	55	USS/MODBUS on RS485 + USS/MODBUS on RS485	
	17	Analog setpoint 2 + MOP setpoint	57	Analog setpoint 2 + USS/MODBUS on RS485	
	20	No main setpoint + Analog setpoint	70	No main setpoint + Analog setpoint 2	
	21	MOP setpoint + Analog setpoint	71	MOP setpoint + Analog setpoint 2	
	22	Analog setpoint + Analog setpoint	72	Analog setpoint + Analog setpoint 2	
	23	Fixed frequency + Analog setpoint	73	Fixed frequency + Analog setpoint 2	
	25	USS/MODBUS on RS485 + Analog setpoint	75	USS/MODBUS on RS485 + Analog setpoint 2	
	27	Analog setpoint 2 + Analog setpoint	77	Analog setpoint 2 + Analog setpoint 2	
P1001[0...2]	Fixed frequency 1 [Hz]		-550.00 - 550.00	10.00	2
P1002[0...2]	Fixed frequency 2 [Hz]		-550.00 - 550.00	15.00	2
P1003[0...2]	Fixed frequency 3 [Hz]		-550.00 -550.00	25.00	2
P1004[0...2]	Fixed frequency 4 [Hz]		-550.00 - 550.00	50.00	2

Parameter	Description		Range	Factory default		Acc. level
P1005[0...2] - P1014[0...2]	Fixed frequency 5 - 14 [Hz]		-550.00 - 550.00	0.00		2
P1015[0...2]	Fixed frequency 15 [Hz]		-550.00 - 550.00	0.00		2
P1016[0...2]	Fixed frequency mode		1 - 2	1		2
	1	Direct selection				
	2	Binary selection				
P1031[0...2]	MOP mode		0 - 3	1		2
P1032	Inhibit reverse direction of MOP		0 - 1	1		2
	0	Reverse direction is allowed				
	1	Reverse direction inhibited				
P1040[0...2]	Setpoint of the MOP [Hz]		-550.00 - 550.00	5.00		2
P1047[0...2]	MOP ramp-up time of the RFG [s]		0.00 - 1000.00	10.00		2
P1048[0...2]	MOP ramp-down time of the RFG [s]		0.00 - 1000.0	10.00		2
r1050	CO: Actual output freq. of the MOP [Hz]		-	-		2
P1058[0...2]	JOG frequency [Hz]		0.00 - 550.00	5.00		2
P1059[0...2]	JOG frequency left [Hz]		0.00 - 550.00	5.00		2
P1060[0...2]	JOG ramp-up time [s]		0.00 - 650.00	10.00		2
P1061[0...2]	JOG ramp-down time [s]		0.00 - 650.00	10.00		2
P1080[0...2]	Minimum frequency [Hz]		0.00 - 550.00	0.00		1
P1082[0...2]	Maximum frequency [Hz]		0.00 - 550.00	50.00		1
P1120[0...2]	Ramp-up time [s]		0.00 - 650.00	10.00		1
P1121[0...2]	Ramp-down time [s]		0.00 - 650.00	10.00		1
P1130[0...2]	Ramp-up initial rounding time [s]		0.00 - 40.00	0.00		2
P1131[0...2]	Ramp-up final rounding time [s]		0.00 - 40.00	0.00		2
P1132[0...2]	Ramp-down initial rounding time [s]		0.00 - 40.00	0.00		2
P1133[0...2]	Ramp-down final rounding time [s]		0.00 - 40.00	0.00		2
P1134[0...2]	Rounding type		0 - 1	0		2
	0	Continuous smoothing				
	1	Discontinuous smoothing				
P1135[0...2]	OFF3 ramp-down time [s]		0.00 - 650.00	5.00		2
P1200	Flying start		0 - 6	0		2
	0	Flying start disabled				
	1	Flying start always active; searches in both directions				
	2	Flying start active after power on, fault, OFF2; searches in both directions				
	3	Flying start active after fault, OFF2; searches in both directions				
	4	Flying start always active; searches in direction of setpoint only				
	5	Flying start active after power on, fault, OFF2; searches in direction of setpoint only				
	6	Flying start active after fault, OFF2; searches in direction of setpoint only				
P1202[0...2]	Search rate: flying start [%]		10 - 200	100		3
P1203[0...2]	Search rate: flying start [%]		10 - 500	100		3
r1204	Status word: flying start V/f		-	-		4
	Bit	Signal	1 signal	Bit	Signal name	1 signal
	00	Voltage reduced	Yes	01	Current could not be applied	Yes
	02	Voltage reduced	Yes	03	Slope-filter started	Yes
	04	Current less threshold	Yes	05	Current-minimum	Yes
	07	Speed could not be found	Yes			
P1210	Automatic restart		0 - 8	1		2
	0	Disabled				

Parameter	Description		Range	Factory default	Acc. level
	1	Trip reset after power on, P1211 disabled			
	2	Restart after mains blackout, P1211 disabled			
	3	Restart after mains brownout or fault, P1211 enabled			
	4	Restart after mains brownout, P1211 enabled			
	5	Restart after mains blackout and fault, P1211 disabled			
	6	Restart after mains brown- /blackout or fault, P1211 enabled			
	7	Restart after mains brown- /blackout or fault, trip when P1211 expire			
	8	Restart after mains brown- /blackout with F3 and leave an interval in seconds determined by P1214, P1211 disabled			
P1215	Holding brake enable		0 - 1	0	2
	0	Motor holding brake disabled			
	1	Motor holding brake enabled			
P1216	Holding brake release delay [s]		0.0 - 20.0	1.0	2
P1217	Holding time after ramp down [s]		0.0 - 20.0	1.0	2
P1227[0...2]	Zero speed detection monitoring time [s]		0.0 - 300.0	4.0	2
P1232[0...2]	DC braking current [%]		0 - 250	100	2
P1233[0...2]	Duration of DC braking [s]		0.00 - 250.00	0.00	2
P1234[0...2]	DC braking start frequency [Hz]		0.00 - 550.00	550.00	2
P1236[0...2]	Compound braking current [%]		0 - 250	0	2
P1237	Dynamic braking		0 - 5	0	2
	0	Disabled	3	20 % duty cycle	
	1	5 % duty cycle	4	50 % duty cycle	
	2	10 % duty cycle	5	100 % duty cycle	
P1300[0...2]	Control mode		0 - 19	0	2
	0	V/f with linear characteristic	5	V/f for textile applications	
	1	V/f with FCC	6	V/f with FCC for textile applications	
	2	V/f with quadratic characteristic	7	V/f with quadratic eco	
	3	V/f with programmable characteristic	19	V/f control with independent voltage set-point	
	4	V/f with linear eco			
P1310[0...2]	Continuous boost [%]		0.0 - 250.0	50.0	2
P1311[0...2]	Acceleration boost [%]		0.0 - 250.0	0.0	2
P1312[0...2]	Starting boost [%]		0.0 - 250.0	0.0	2
r1348	Economy mode factor [%]		-	-	2
P1800[0...2]	Pulse frequency [kHz]		2 - 16	4	2
P1820[0...2]	Reverse output phase sequence		0 - 1	0	2
	0	Forward			
	1	Reverse the Motor			
P1900	Select motor data identification		0 - 2	0	2
	0	Disabled			
	2	Identification of all parameters in standstill			
P2000[0...2]	Reference frequency [Hz]		1.00 - 550.00	50.00	2
P2010[0...1]	USS / MODBUS baudrate		6 - 12	[0] 6 [1] 8	2
	6	9600 bps	10	76800 bps	
	7	19200 bps	11	93750 bps	
	8	38400 bps	12	115200 bps	
	9	57600 bps			
Index:	[0]	USS / MODBUS on RS485			
	[1]	USS on RS232 (reserved)			
P2011[0...1]	USS address		0 - 31	0	2

Parameter	Description		Range	Factory default	Acc. level
P2021	Modbus address		1 - 247	1	2
P2023	RS485 protocol selection		0 - 2	1	1
	0	None			
	1	USS			
	2	Modbus			
Note:	After changing P2023, a power-cycle of the inverter (which may take several seconds) is required.				
P2034	MODBUS parity on RS485		0 - 2	2	2
P2035	MODBUS stop bits on RS485		1 - 2	1	2
r2110[0...3]	CO: Warning number		-	-	2
P2200[0...2]	BI: Enable PID controller		-	0	2
P2201[0...2]	Fixed PID setpoint 1 [%]		-200.00 - 200.00	10.00	2
P2202[0...2]	Fixed PID setpoint 2 [%]		-200.00 - 200.00	20.00	2
P2203[0...2]	Fixed PID setpoint 3 [%]		-200.00 - 200.00	50.00	2
P2204[0...2]	Fixed PID setpoint 4 [%]		-200.00 - 200.00	100.00	2
P2205[0...2] - P2214[0...2]	Fixed PID setpoint 5 - 14 [%]		-200.00 - 200.00	0.00	2
P2215[0...2]	Fixed PID setpoint 15 [%]		-200.00 - 200.00	0.00	2
P2216[0...2]	Fixed PID setpoint mode		1 - 2	1	2
	1	Direct selection			
	2	Binary selection			
P2240[0...2]	Setpoint of PID-MOP [%]		-200.00 - 200.00	10.00	2
r2250	CO: Output setpoint of PID-MOP [%]		-	-	2
P2253[0...2]	CI: PID setpoint		0 - 4294967295	0	2
P2264[0...2]	CI: PID feedback		0 - 4294967295	0	2
r2266	CO: PID filtered feedback [%]		-	-	2
r2272	CO: PID scaled feedback [%]		-	-	2
r2273	CO: PID error [%]		-	-	2
P2274	PID derivative time [s]		0.000 - 60.000	0.000	2
P2280	PID proportional gain		0.000 - 65.000	3.000	2
P2285	PID integral time [s]		0.000 - 60.000	0.000	2
P2291	PID output upper limit [%]		-200.00 - 200.00	100.00	2
P2292	PID output lower limit [%]		-200.00 - 200.00	0.00	2
r2294	CO: Actual PID output [%]		-	-	2
P2365[0...2]	Hibernation enable / disable		0 - 1	0	2
	0	Disabled			
	1	Enabled			
r3113.0...15	CO / BO: Fault bit array		-	-	1
P3900	End of quick commissioning		0 - 3	0	1
	0	No quick commissioning			
	1	End quick commissioning with factory reset			
	2	End quick commissioning			
	3	End quick commissioning only for motor data			
P8553	Menu type		0 - 1	0	1
	0	Menus with no text			
	1	Menus with some text			

A.2 Faults and alarms

Fault code list

Fault	Description	Fault	Description
F1	Overcurrent	F63	Parameter cloning contents incompatible
F2	Overvoltage	F64	Inverter attempted to do an automatic clone during startup
F3	Undervoltage	F71	USS setpoint fault
F4	Inverter overtemperature	F72	USS/MODBUS setpoint fault
F5	Inverter I^2t	F80	Signal lost on analog input
F6	Chip temperature rise exceeds critical levels	F85	External fault
F11	Motor overtemperature	F100	Watchdog reset
F12	Inverter temperature signal lost	F101	Stack overflow
F20	DC ripple too high	F200	Script error
F35	Maximum number of auto restart attempts exceeded	F221	PID feedback below minimum value
F41	Motor data identification failure	F222	PID feedback above maximum value
F51	Parameter EEPROM fault	F350	Configuration vector for the inverter failed
F52	Power stack software fault	F395	Acceptance test / confirmation pending
F60	Asic timeout	F410	Cavitation protection failure
F61	MMC/SD card parameter cloning failed	F452	Belt failure
F62	Parameter cloning contents invalid		

- To navigate through the current list of faults, press ▲ or ▼.
- To view the inverter status at fault, press OK (> 2 s); to return to the fault code display, press OK (< 2 s).
- To clear/acknowledge the fault, press OK or acknowledge externally if the inverter has been set up so; to ignore the fault, press M.

After you acknowledge or ignore the fault, the screen returns to the previous display. The fault icon remains active until the fault is cleared/acknowledged.

Alarm code list

Alarm	Description	Alarm	Description
A501	Current limit	A600	RTOS overrun warning
A502	Overvoltage limit	A910	Vdc_max controller deactivated
A503	Undervoltage limit	A911	Vdc_max controller active
A504	Inverter overtemperature	A912	Vdc_min controller active
A505	Inverter I^2t	A921	Analog output parameters not set properly
A506	IGBT junction temperature rise warning	A922	No load applied to inverter
A507	Inverter temperature signal lost	A923	Both JOG left and JOG right are requested
A511	Motor overtemperature I^2t	A930	Cavitation protection warn
A535	Braking resistor overload	A936	PID autotuning active
A541	Motor data identification active	A952	Belt failure detected

Note that alarms cannot be acknowledged. They are cleared automatically once the warning has been rectified.

B General license conditions

For Resellers: In order to avoid infringements of the license conditions by the reseller or the buyer these instructions and license conditions and accompanying CD – if applicable - have to be forwarded to the buyers.

1) Siemens License Conditions

General License Conditions for Software Products for Automation and Drives

(2011-08-01)

1 Supply of Software to Licensee and Granting of Rights to use the Software

1.1 These General License Conditions shall exclusively apply to the delivery of Software for Automation and Drives to the Licensee. General terms and conditions of the Licensee shall apply only where expressly accepted in writing by us. The scope of delivery of the Software shall be determined by the congruent mutual written declarations of both parties. We shall grant the Licensee rights to use the software specified in the Confirmation of Order or, if the Licensee does not receive a Confirmation of Order, the software specified in the Certificate of License or that specified in the Software Product Sheet, if the Licensee is instead submitted a Software Product Sheet (hereinafter referred to as "SW"). The Certificate of License and the Software Product Sheet shall be collectively referred to as "CoL" hereinafter. The Licensee shall be submitted the CoL when the SW is supplied or in conjunction with the delivery bill. The way in which the SW is supplied is also derived directly from the Confirmation of Order or from the SW purchase order number contained in the Confirmation of Order, in conjunction with the associated order data of our catalog valid at the time of the Confirmation of Order (hereinafter collectively referred to as "Order Data"), or from the CoL. If the Licensee does not receive a data medium, it shall be authorized to copy the SW already available to it to the extent necessary to exercise the rights to use the SW granted to it. The aforesaid shall apply, mutatis mutandis, to electronic supply of the software (downloading). Where reference is made to the Order Data or the CoL in these General License Conditions, the reference to the CoL is of significance if the Licensee has not received a Confirmation of Order. In any case, the data contained in the Order Data is also contained in the CoL.

1.2 The Documentation relating to the SW (hereinafter referred to as "Documentation") shall be purchased separately, unless either the Order Data or CoL contains a stipulation stating that it belongs to the scope of delivery. If the Licensee is authorized to copy the SW in accordance with Clause 1.1, this shall also apply to the Documentation provided that it is included in the scope of delivery.

1.3 In the event that we submit a License Key to the Licensee, which unlocks the SW (hereinafter referred to as "License Key"), this License Key must also be installed.

1.4 The rights granted to the Licensee with respect to the SW are based on the License Type (see Section 2) and the Software Type (see Section 3). The license and Software Types are detailed in the Order Data or CoL. If the SW is supplied electronically or if copying rights are granted for it, the rights and duties specified in these General License Conditions shall apply to the legitimately generated copies.

1.5 If the Licensee is legitimately in possession of a previous SW version/release (hereinafter referred to as "Previous Version"), the Licensee shall be authorized to exercise the rights to use the SW granted to it either with respect to the SW or - if this is intended from a technical point of view - to the Previous Version, at its own discretion (downgrading). If the SW is an Upgrade or PowerPack in accordance with Section 4, Section 4 shall apply additionally.

1.6 If Previous Versions are listed in the Readme file of the SW under the category “parallel use”, the Licensee has the right to exercise, alternatively to the user rights granted to him for the SW, the user rights for the listed Previous Versions in one (1) Instance. If the “Type of use” named in the Order Data or the CoL is: “Installation” or “User”, the Licensee is entitled to the previously described right additionally to and at the same time as the Previous Versions listed in one Instance. An “Instance” in the context of these General License Conditions is either an instance in a physical operating system environment or an instance in a virtual operating system environment. The transferability of the user rights onto Previous Versions is only permissible in conjunction with the user rights for the SW in accordance with Clause 5.3.

1.7 In case the Licensee obtains only the data media but no license as per the Order Data or the CoL, any use of the SW by the Licensee is subject to the acquisition of a license according to Section 2. Up to the acquisition of the license, the Licensee is not entitled to supply the SW to third parties.

1.8 In case the SW contains Open Source Software or any similar software of a third party (hereinafter referred to as "OSS") the OSS is listed in the Readme_OSS-file of the SW. The Licensee is entitled to use the OSS in accordance with the respective license conditions of the OSS. The license conditions are provided on the same data carrier as the SW. The license conditions of the respective OSS shall prevail over these General License Conditions with respect to the OSS. If the license conditions of the OSS require the distribution of the source code of such OSS we shall provide such source code on request against payment of the shipping and handling charges.

1.9 The SW may be or contain licensed software other than OSS, i.e. software which has not been developed by us itself but which has been licensed to us by a third party (hereinafter referred to as the "Licensor"), e.g. Microsoft Licensing Inc. If the Licensee receives the terms and conditions stipulated by the relevant Licensor together with the SW in the Readme_OSS file in this case, such terms and conditions shall apply with respect to the Licensor's liability vis-à-vis the Licensee. Our own liability vis-à-vis the Licensee shall be governed in any case by these General License Conditions.

2 License Type

Depending on the License Type, the Licensee shall be granted the following rights to the SW:

2.1 Single License (One Off License, Copy License) The term "One Off License" or "Copy License" which may be used in the Software Product Sheet corresponds to the term "Single License". The following regulation shall apply to the full scope of the One Off License / Copy License. The Licensee shall be granted the non-exclusive right, transferable in accordance with Clause 5.3 and valid for an unlimited period of time, to install the SW in one (1) Instance and to utilize the SW thus installed in the manner specified in the Order Data or CoL (see "Type of Use").

2.2 Floating License The Licensee shall be granted the non-exclusive right, transferable in accordance with Clause 5.3 and valid for an unlimited period of time, to install the SW on any desired number of the Licensee's hardware devices. The number of objects (for example, users or devices) permitted to utilize the SW at the same time can be derived from the Order Data or CoL (see "Type of Use).

2.3 Rental License The Licensee shall be granted the non-exclusive right, transferable in accordance with Clause 5.3 and limited in time as stipulated in the Order Data or CoL (see "Type of Use"), to install and use the SW in one (1) Instance. If the period of use is specified in hours, the usage decisive for the calculation of the time limit commences with the software start-up and finishes with its shut-down. If the period of usage is specified in days, weeks or months, the specified period, which commences in conjunction with the first SW start-up, shall apply independently of the actual time of usage. If the period of use is specified with a date, the right of use ends on this date – regardless of the actual period of use.

2.4 Rental Floating License The Licensee shall be granted the non-exclusive right, transferable in accordance with Clause 5.3 and limited in time as stipulated in the Order Data or the CoL (s. “Type of use”), to install the SW on any desired number of the Licensee's hardware devices. The number of objects (for example, users or devices) permitted to utilize the SW at the same time can be derived from the Order Data or CoL (see "Type of Use) as well. If the period of use is specified in hours, the usage decisive for the calculation of the time limit commences with the software start-up and finishes with its shut-down. If the period of usage is specified in days, weeks or months, the specified period, which commences in conjunction with the first SW start-up, shall apply independently of the actual time of usage. If the period of use is specified with a date, the right of use ends on this date – regardless of the actual period of use.

2.5 Demo License The Licensee shall be granted the non-exclusive right, transferable in accordance with Clause 5.3 and limited in time as stipulated in the Order Data or the CoL (s. “Type of use”), to install the SW in one (1) Instance and to use it for validation purposes. If the period of usage is specified in days, weeks or months, the specified period, which commences in conjunction with the first SW start-up, shall apply independently of the actual time of usage. If the period of use is specified with a date, the right of use ends on this date – regardless of the actual period of use.

2.6 Demo Floating License The Licensee shall be granted the non-exclusive right, transferable in accordance with Clause 5.3 and limited in time as stipulated in the Order Data or the CoL (s. “Type of use”), to install the SW on any desired number of the Licensee's hardware devices. The number of objects (for example, users or devices) permitted to utilize the SW at the same time can be derived from the Order Data or CoL (see "Type of Use) as well. If the period of usage is specified in days, weeks or months, the specified period, which commences in conjunction with the first SW start-up, shall apply independently of the actual time of usage. If the period of use is specified with a date, the right of use ends on this date – regardless of the actual period of use.

2.7 Trial License The Licensee shall be granted the non-exclusive and non-transferable right to install the SW in one (1) Instance and to use it for validation purposes in the manner specified in the Order Data or CoL (see "Type of Use"). The period of usage is limited to 14 days and commences with the SW start-up, unless a different period of usage is specified in the Order Data or CoL.

3 Software Type

If the Software Type is not specified in the Order Data or CoL, the rights specified in Clause 3.2 (Runtime Software) shall apply to the SW.

3.1 Engineering Software (hereinafter referred to as "E-SW") In the event that the Licensee uses E-SW to generate its own programs or data containing parts of the E-SW, the Licensee shall have the right, without having to pay any license fee, to copy and to use these parts of the E-SW as a part of its own programs or data, or to supply them to third parties for use. In the event that such parts are supplied to third parties for use, these parties shall be bound in writing to comply with stipulations corresponding to those in Clauses 5.1 and 5.2 with respect to the above parts of the E-SW.

3.2 Runtime Software (hereinafter referred to as "R-SW") If the Licensee incorporates R-SW or any parts thereof into its own programs or data, it shall purchase a license with respect to the R-SW each time it installs or copies - depending on what is done first - its own programs or data containing RSW or parts thereof, in accordance with the relevant intended Type of Use and on the basis of the Siemens catalog valid at that time. In the event that the Licensee supplies the specified programs or data to third parties for their use, these parties shall be bound in writing to adhere to stipulations corresponding to those in Section 5, with respect to the R-SW parts contained therein. The aforesaid shall not affect the Licensee's obligation to purchase a license for the R-SW if the RSW original is copied. If the R-SW contains tools for parameterization/configuration and extended rights have been granted in this regard, this will be detailed in the readme file of the R-SW.

4 Upgrade and PowerPack

If it is apparent from the Order Data or CoL, e.g. by the addition "Upgrade" or “PowerPack” after the SW product name, that the SW is an upgrade for another software item (hereinafter referred to as "Source License"), the rights originally granted to the Licensee to use the Source License end in conjunction with the upgrade measure. The rights of use in accordance with Clause 1.6 remain unaffected by this. However, the Licensee is entitled to undo the upgrading (downgrading) - if this is intended from a technical point of view - and to exercise the rights to use the SW granted to it with respect to the Source Version in accordance with Clause 1.5.

5 Further Rights and Duties of the Licensee

5.1 Unless a stipulation to the contrary relating to a specific number of copies is contained on the data medium or in the readme file of the SW, the Licensee may generate an appropriate number of copies of every item of SW which it is authorized to use in accordance with these General License Conditions, where such copies shall be used exclusively for data backup purposes. Furthermore the Licensee may only copy the SW if and insofar as it has been granted copying rights by us in writing.

5.2 The Licensee shall not be entitled to modify, decompile or reverse engineer the SW. Nor may it extract any individual parts unless this is permitted by mandatory copyright law. Furthermore, the Licensee shall not be entitled to remove any alphanumeric identifiers, trademarks or copyright notices from the SW or the data medium and, insofar as it is entitled to make copies of the SW, shall copy them without alteration. The aforementioned regulation shall apply accordingly to the Documentation supplied in accordance with Section 1.

5.3 The Licensee shall be entitled to completely transfer the right to use the SW granted to it to a third party, provided that it concludes a written agreement with the third party in conformance with all of the conditions contained in this Section 5 and on the proviso that it does not retain any copies of the SW. If the Licensee has received a License Key for the SW, this key shall be supplied to the third party together with the SW. Furthermore, the third party shall be submitted the CoL together with these General License Conditions. The Licensee shall submit the CoL received for the SW to us at any time, if requested.

5.4 If the SW is a PowerPack or an Upgrade, the Licensee shall keep the CoL of the Source License and submit it to us at any time, if requested, together with the CoL for the SW. In the event that the Licensee transfers its right to use the PowerPack SW or Upgrade SW in accordance with Clause 5.3, it shall also submit the CoL of the Source License to the third party.

5.5 If the Licensee receives a data medium which, in addition to the SW, contains further software products which are released for use, then it shall have the right to use these released software products exclusively for validation purposes, for a limited period of time and free of charge. The period of use shall be limited to 14 days, commencing with the first start-up of the relevant software program unless a different period is specified e.g. in the readme file of the relevant software product. These software products supplied exclusively for validation purposes shall be governed, mutatis mutandis, by the stipulations contained in these General License Conditions. The Licensee shall not be authorized to pass on these software products separately, i.e. without the SW, to a third party.

The conditions of the purchase contract apply if not otherwise stipulated hereafter for the Open Source Software.

2) License Conditions and Disclaimers for Open Source Software and other Licensed Software

In the product "SINAMICS V20", Copyright Siemens AG, 2015 (hereinafter "Product"), the following Open Source Software is used either unchanged or in a form that we have modified, and additionally the other License Software noted below:

Liability for Open Source Software

Open Source Software is provided free of charge. We are liable for the Product including Open Source Software contained in accordance with the license conditions applicable to the Product. Any liability for use of Open Source Software beyond the program flow intended for the Product is explicitly excluded. Furthermore, any liability for defects resulting from modifications to the Open Source Software by you or third parties is excluded.

We do not provide any technical support for the Product if it has been modified.

Availability of Source Code

Certain license conditions of third-party software components used in this product may require Siemens to provide you with the source code and additional information for such components. In most cases, Siemens provides this information on or with the device. In case Siemens is technically unable to do so, you may request a copy of this information against payment of shipping and handling charges. Please send your request to the address provided at the end of this section.

Siemens AG

Digital Factory

Customer Services DF&PD

DF CS SD CCC TS

Gleiwitzer Str. 555

90475 Nuernberg, Deutschland

Internet: http://www.siemens.com/automation/support-request

Tel.: +49 911 895 7222

Email: support.automation@siemens.com

Please note the following license conditions and copyright notices applicable to Open Source Software and other License Software:

Component	Open Source Software ("OSS") [Yes/No]	Copyright Information / File
FatFS R0.08a	YES	LICENSE AND COPYRIGHT INFORMATION FOR COMPONENT FATFS R0.08A
GNU GCC libgcc 4.8.3	YES	LICENSE AND COPYRIGHT INFORMATION FOR COMPONENT GNU GCC LIBGCC 4.8.3
Lua 5.2.1	YES	LICENSE AND COPYRIGHT INFORMATION FOR COMPONENT LUA 5.2.1
STM32F4xx Standard Peripherals Library V1.3.0	NO	LICENSE AND COPYRIGHT INFORMATION FOR COMPONENT STM32F4XX STANDARD PERIPHERALS LIBRARY V1.3.0

LICENSE CONDITIONS AND COPYRIGHT NOTICES

For detailed information about license conditions and copyright notices of the individual software mentioned in the above table, visit Siemens Service and Support Web site at https://support.industry.siemens.com/cs/ww/en/ps/13208.

Siemens AG
Division Digital Factory
Postfach 48 48
90026 NÜRNBERG
GERMANY

SINAMICS V20 Inverter
A5E37281078-003, 05/2016